578-92-2-343

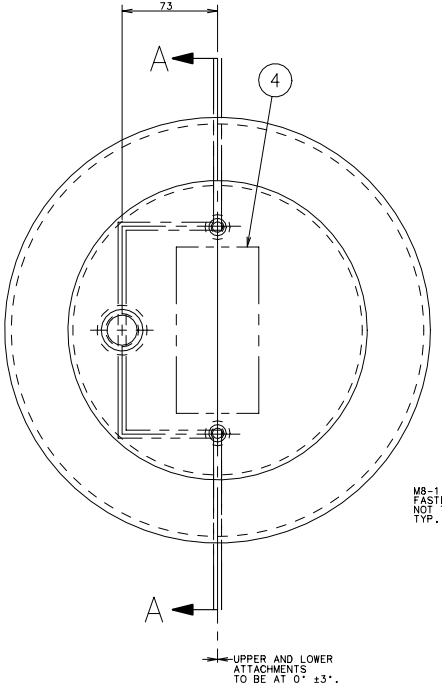

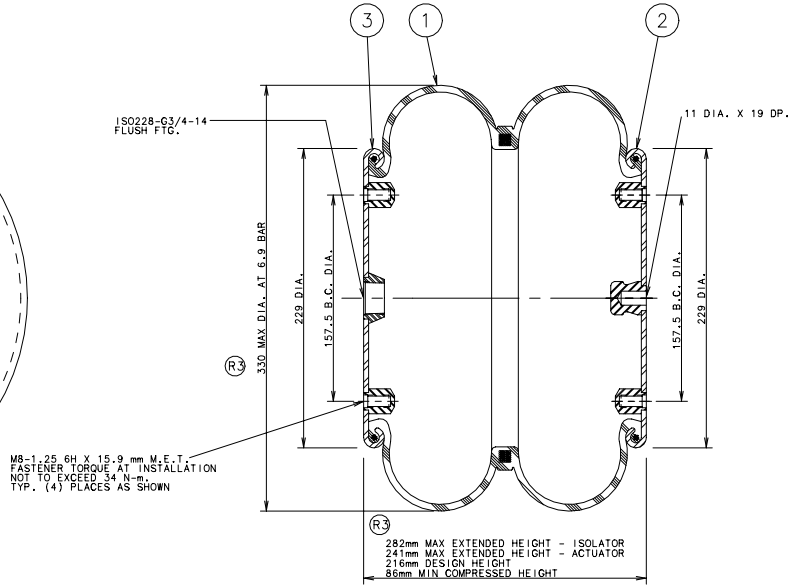

SECTION A-A

NOTES:

1. ALL DIMENSIONS ARE IN MILLIMETERS UNLESS OTHERWISE NOTED.
2. ASSEMBLY DESIGNED TO OPERATE BETWEEN -55°C & +70°C AND AFTER STORAGE AT -54°C.
3. ASSEMBLY LEAK TESTED ACCORDING TO GMS XIII-301.
4. AIR SPRING MUST BE RESTRAINED BY CUSTOMER-SUPPLIED DEVICE TO MAXIMUM EXTENDED HEIGHT, AND COMPRESSION BELOW MINIMUM HEIGHT MUST ALSO BE PREVENTED.
5. MINIMUM PRESSURE AT MAXIMUM EXTENSION MUST NOT BE LESS THAN 0.34 BAR IN SERVICE.
6. WARNING: DO NOT INFLATE UNLESS FULLY SECURED IN THE SUSPENSION OR OTHER ADEQUATE STRUCTURE. DO NOT INFLATE TO MORE THAN 6.9 BAR AT ANY HEIGHT.

OTHERWISE BODILY INJURY COULD RESULT.

▽INDICATES A KEY CRITICAL CHARACTERISTIC(KCC), WHICH MUST CONFORM TO GMS VI-010

ITEM	NAME	DRAWING NO./SPEC. NO	REQ.
4	WARNING & IDENT. LABEL	566-00-9-269	1
3	UPPER BEAD PLATE	ASA-92-8-323	1
2	LOWER BEAD PLATE	ASA-92-6-101	1
1	FLEXIBLE MEMBER	578-92-3-309	1

BILL OF MATERIALS

REV.	BY	DATE	DESCRIPTION
1	M.S.	11/15/99	282 WAS 305
2	DWR	06-17-03	CUSTOMER HEIGHT 241mm, REVISED ISOLATOR HEIGHT 277mm
3	DWB	3/16/2004	MIN. HT. WAS 223MM, MAX HT. WAS 277MM.
4			
5			
6			

TOLERANCE ON FINISHED SURFACES, UNLESS OTHERWISE SHOWN.

	mm	INCH
X.X	±2.0	.X ±.10
.XX	±0.7	.XX ±.030
.XXX	±0.2	.XXX ±.010
ANGLES	±1.0°	

REFERENCE -

NOTE: DRAWING MAY NOT BE PLOTTED TO SCALE

THE GOODYEAR TIRE & RUBBER COMPANY GREEN, OHIO

This drawing and the subject matter thereof are the property of The Goodyear Tire & Rubber Company, and shall not be reproduced or copied in whole or in part, nor shall the information contained therein be used or disclosed, except as required by law, without express written permission of Goodyear. Failure to comply with these restrictions may result in civil liability and criminal prosecution.

DRAWN BY M LILLIS 9-21-99
CHECKED BY
APPROVED BY
DATE
DEPT NO:021
SCALE: HALF
TITLE AIR SPRING ASSEMBLY
PART NO. 2B12- 343
578-92-2-343
C SIZE
F021-040.R01 ASSY FRAME-C